

Earnings Presentation

Harold Bevis – President & Chief Executive Officer
Chris Bohnert - Chief Financial Officer

Q2 – 2022
August 5, 2022

Forward Looking Statements and Non-GAAP Financial Measures

These slides contain forward-looking statements that are subject to risks and uncertainties. These statements often include words such as "believe", "anticipate", "plan", "expect", "intend", "will", "should", "could", "would", "project", "continue", "likely", andsimilar expressions. In particular, this document may contain forward-looking statements about the Company's expectations for future periods with respect to its plans to improve financial results, the future of the Company's end markets, including the short-term and long-term impact of the COVID-19 pandemic on our business and the global supply chain, changes in the Class 8 and Class 5-7 North America truck build rates, performance of the global construction equipment business, the Company's prospects in the wire harness, warehouse automation and electric vehicle markets, the Company's initiatives to address customer needs, organic growth, the Company's strategic plans and plans to focus on certainsegments, competition faced by the Company, volatility in and disruption to the global economic environment, including inflation and labor shortages and the Company's financial position or other financial information. These statements are based on certain assumptions that the Company has made in light of its experience as well as its perspective on historical trends, current conditions, expected future developmentsand other factors it believes are appropriate under the circumstances. Actual results may differ materially from the anticipated results because of certain risks and uncertainties, including those included in the Company's filings with the SEC. There can be no assurance that statements made in this document relating to future events will be achieved. The Company undertakes no obligation to update or revise forward-looking statements to reflect changed assumptions, the occurrence of unanticipated events or changes to future operating results over time. All subsequentwritten and oral forward-looking statements attributable to the Company or persons acting on behalf of the Company are expressly qualified in their entirety by such cautionary statements.

See slide 15 for use of non-GAAP financial measures.

Q2 2022 Highlights

FINANCIAL HIGHLIGHTS

NET SALES
$250.8
MILLION

ADJUSTED EBITDA
$12.4
MILLION

ADJUSTED OPERATING INCOME
$8.1
MILLION

DILUTED ADJ. EPS
$0.13

BUSINESS HIGHLIGHTS

PRICING

>$15
MILLION

Expected profit benefit for second half of 2022 due to customer price negotiations.

NEW BUSINESS

29

new business wins YTD **worth $104 million** when fully ramped.

ELECTRIC VEHICLES

- Innovation Center opening in Phoenix, AZ
- Awarded full system design on **4 electric vehicles**



FREE CASH FLOW

$11.9
MILLION

in Q2 2022

Note: US GAAP net income attributable to Commercial Vehicle Group, Inc. was $2.5M for Q2 FY22. GAAP diluted earnings per share was $0.08 for Q2 FY22.

Second Half 2022 Poised for Improvement

- ✓ Substantially renegotiated pricing with majority of customers.
- ✓ Continued execution of restructuring plan – vertical integration, regionalization, targeted headcount reduction.
- ✓ China COVID lockdown is currently lifted at our Shanghai plant.
- ✓ Ukraine and Czech Republic production markedly improved.
- ✓ OEM's report fully booked for N.A. Class 8 trucks in 2022.
- ✓ New business expected to offset startup costs.
- ✓ Second half expected to deliver free cashflow and additional debt repayment.
- ✓ We are still fighting inflation, supply chain challenges, labor constraints, and ramping up over 100 new programs recently won.



Key Markets Update

NA Class 8 Truck Build Outlook[1]

(in thousands)



- Every 10,000 ICE trucks built equals ~$13 million sales for CVG.
- Supply chain constraints may pressure Class 8 builds in 2022 below industry expectations.
- CVG estimates 2022 build rate between 290,000 – 305,000.

[1]*Per June 2022 ACT Research Report*

Electric Vehicles

- U.S. electric truck market expected to grow at a 54% CAGR from 2021-2030[2].
- CVG is now established as an electrical systems supplier to the EV industry.
- Since 2020, CVG has quickly established itself as an electrical systems design partner to the EV industry.

[2]*Per P&S Intelligence*

Warehouse Automation

- N.A industry below trendline at the moment.
- Long-term outlook is expected to grow 15% CAGR from 2022-2027[3].
- Market to grow to $41 Billion by 2027[3].

[3]*Per LogisticsIQ*

HIGHLY CONFIGURABLE ELECTRICAL APPLICATIONS

Electric Vehicle Systems

- Custom designed high and low voltage electrical systems.
- Custom designed high and low voltage distribution boxes for vehicle optimization.

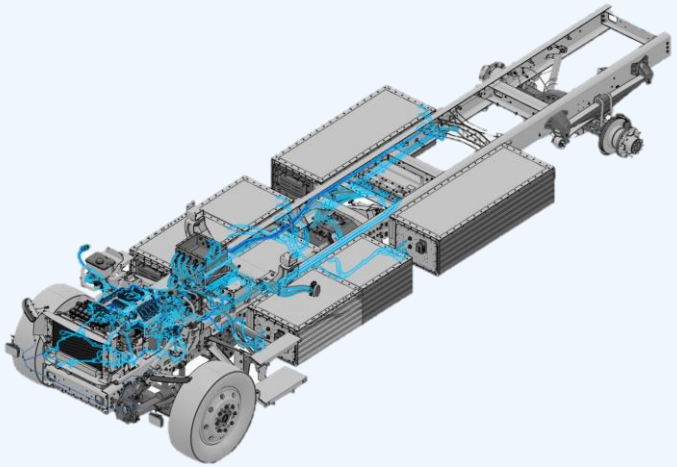

Wire harness distribution on EV truck frame

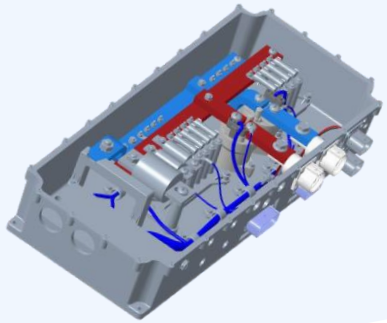

Distribution box



Electric Vehicles



Class 8 Trucks



Aviation & Aerospace



Bus & Van

NUMEROUS END MARKETS



Industrial



Military & Defense



Warehouse Automation



Rail



Marine

New Business Wins Update

Global Pipeline ~ $5 Billion*
As of 6/30/2022

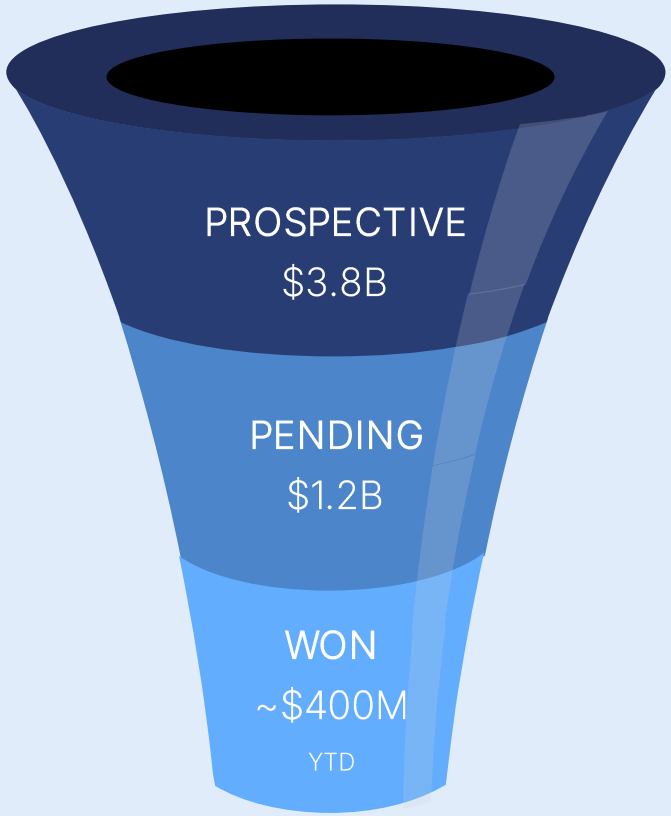

*estimated lifetime program value over 3-7 years

New business wins estimated value 2022-2025

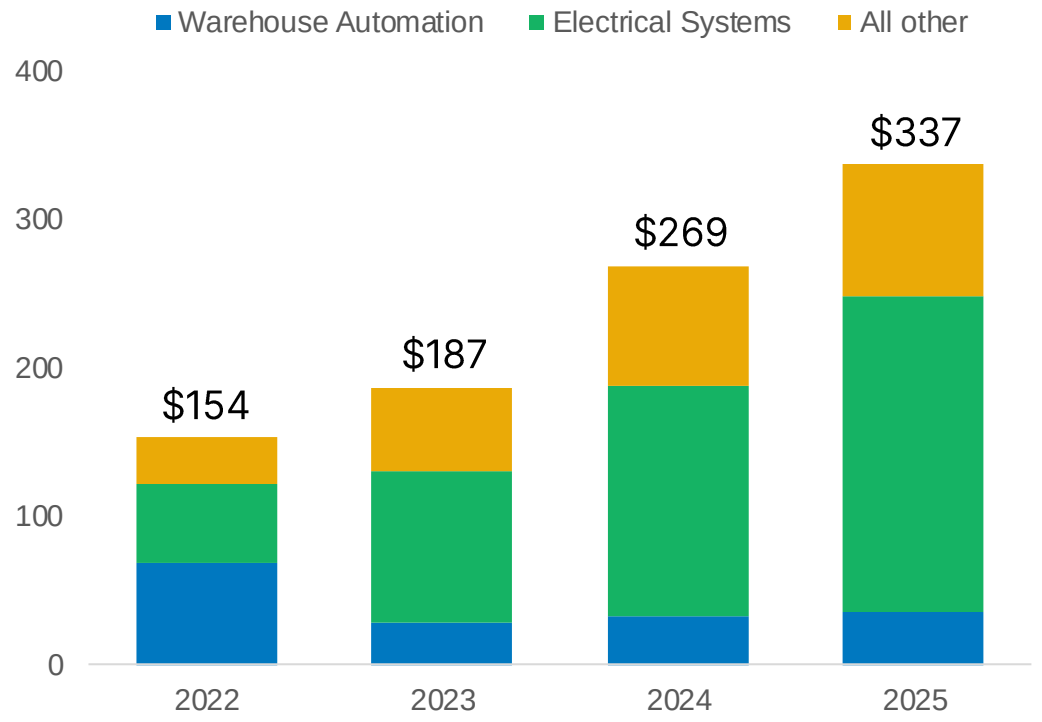

*All amounts in millions

- Existing wins now totaling approximately $2.0B in lifetime revenue.
- Wins concentrated in Electrical Systems segment.

Initiatives to Drive Shareholder Value



Core Business Optimization

- Improve pricing strategy and contractual agreements.
- High impact vertical integration.
- Cost reduction program.



Win New Business

- Grow Earnings.
- Improve revenue mix.
- Incurring startup costs for future growth.



Debt Pay Down & Improve Free Cash Flow

- Pay down $25-40 million in debt.
- Leverage ratio expected to decrease to 2.2x – 1.8x.

Will Consider Targeted M&A to accelerate or de-risk these initiatives.

ESG at CVG

Environment

Create positive impact on the environment by reducing carbon emissions and waste.

- Partnering with the U.S. Department of Energy's Better Plants Program to boost efficiency.
- Developing additional metrics to track global emissions progress.

Social

Increase diversity and ensure all people are respected and included.

- Prioritize plant safety
  - Our Incident rate: 0.81%
- Support the advancement of women and minorities.
- Increase transparency and open communication.
- Support and celebrate our employees around the world.

Governance

Create and practice policies and procedures with transparency and integrity.

- Board of Directors provides company oversight
  - Audit Committee
  - Compensation Committee
  - Nominating Governance and Sustainability Committee
- CVG Ethics Line
- Policies and Code of Conduct












Long-Term Roadmap

Revenue

(in millions)

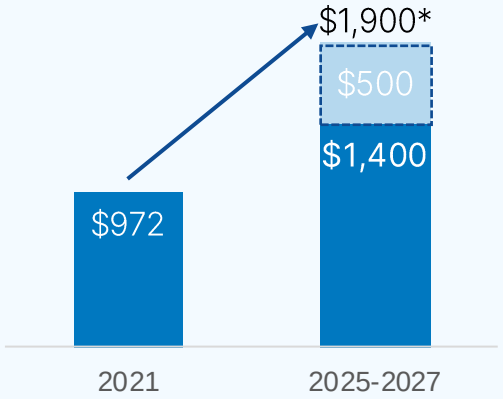

Timing may be impacted by resolution of global supply chain issues.

Adjusted OI Margin

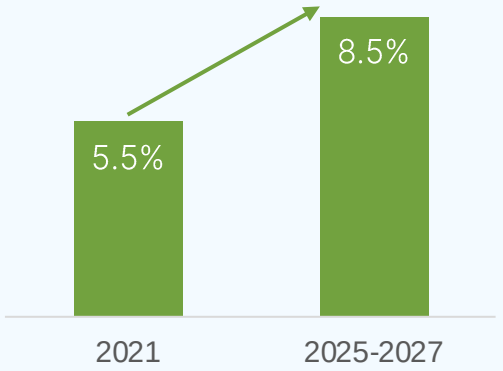

**Assumes $500 million additional wins consistent with past 30 months and constrained truck build.*

- Improve the company's legacy business, renegotiate contracts, optimize costs and improve profitability.
- Strengthen the company's revenue profile with accretive new business that increases the company's value proposition and decreases its legacy customer dependence.
- Improve the company's balance sheet, increase free cash flow, pay down debt.



Financial Review

Q2 – 2022

August 5, 2022

Second Quarter Results

GAAP Measures	Three Months Ended June 30	
($ in millions except for share information)	2022	2021
Revenue	$ 250.8	$ 257.9
Operating Income	6.2	16.3
Operating Income Margin	2.5%	6.3%
Diluted EPS	0.08	0.16

NON-GAAP Measures	Three Months Ended June 30	
($ in millions except for share information)	2022	2021
Adjusted EBITDA	$ 12.4	$ 21.6
Adjusted EBITDA Margin	4.9%	8.5%
Adjusted Diluted EPS	0.13	0.33
Free Cash Flow	11.9	(14.6)

Segment Results

For the Three Months Ended June 30, 2022 (in millions)	Net Sales		Adjusted Operating Income	
	2022	2021	2022	2021
Vehicle Solutions	$ 142.8	$ 130.2	$ 1.5	$ 8.2
Warehouse Automation	28.5	54.3	1.7	8.6
Electrical Systems	47.3	44.2	6.5	3.1
Aftermarket & Accessories	32.2	29.2	1.7	3.7



Q&A

Q2 – 2022

August 5, 2022



Appendix

Q2 – 2022

August 5, 2022

Non-GAAP Financial Measures

This earnings presentation contains financial measures that are not calculated in accordance with U.S. generally accepted accounting principles ("GAAP"). In general, the non-GAAP measures exclude items that (i) management believes reflect the Company's multi-year corporate activities; or (ii) relate to activities or actions that may have occurred over multiple or in prior periods without predictable trends.Management uses these non-GAAP financial measures internally to evaluate the Company's performance, engage in financial and operational planning and to determine incentive compensation.

Management provides these non-GAAP financial measures to investors as supplemental metrics to assist readers in assessing the effects of items and events on the Company's financial and operating results and in comparing the Company's performance to that of its competitors and to comparable reporting periods. The non-GAAP financial measures used by the Company may be calculated differently from, and therefore may not be comparable to, similarly titled measures used by other companies.

The non-GAAP financial measures disclosed by the Company should not be considered a substitute for, or superior to, financial measures calculated in accordance with GAAP. The financial results calculated in accordance with GAAP and reconciliations to those financial statements are set forth in the supplemental information.

Reconciliation of GAAP to Non-GAAP Financial Measures

(in millions)	Q2 2022	Q2 2021
Operating Income	6.2	16.3
Deferred Consideration Purchase Accounting	0.1	0.1
Restructuring	1.8	-
Investigation	-	0.2
Adjusted Operating Income	8.1	16.6
% of Revenues	3.2%	6.5%
Net Income/(Loss)	2.5	5.1
Interest Expense	2.1	2.8
Provision (benefit) for income taxes	0.9	1.5
Depreciation Expense	3.7	3.8
Amortization Expense	0.8	0.9
EBITDA	10.0	14.1
% of Revenues	4.0%	5.5%
EBITDA Adjustments		
Deferred consideration purchase accounting	0.1	0.1
Restructuring	1.8	-
Investigation	-	0.2
Hryvnia fair value adjustments on forward exchange contracts	(0.4)	-
Loss on extinguishment of debt	0.9	7.2
Adjusted EBITDA	12.4	21.6
% of Revenues	4.9%	8.4%

Reconciliation of GAAP to Non-GAAP Financial Measures – Adjusted EBITDA

(in millions)	Q3 2020	Q4 2020	Q1 2021	Q2 2021	Q3 2021	Q4 2021	Q1 2022	Q2 2022
Net income/(Loss)	4.2	(4.1)	8.5	5.1	7.5	2.6	4.0	2.5
Interest	5.5	5.2	5.0	2.8	1.6	1.7	2.0	2.1
Provision / (Benefit) for Income Taxes	(1.0)	3.9	2.5	1.5	2.4	1.9	1.4	0.9
Depreciation	3.8	3.8	3.8	3.8	3.7	3.8	3.5	3.7
Amortization	0.9	0.9	0.9	0.9	0.9	0.9	0.9	0.8
EBITDA	13.3	9.7	20.7	14.1	16.1	10.9	11.8	10.0
Adjustments								
Executive Transition	-	-	-	-	0.7	-	-	-
Restructuring	2.2	1.6	-	-	-	1.9	1.0	1.8
Investigation	0.5	0.7	0.2	0.2	-	-	-	-
Deferred consideration purchase accounting	0.5	1.0	0.2	0.1	0.1	0.1	0.1	0.1
Loss on extinguishment of debt	-	-	-	7.2	-	-	-	0.9
Hryvnia fair value adjustments on forward exchange contracts	-	-	-	-	-	-	0.6	(0.4)
Adjusted EBITDA	16.5	13.0	21.1	21.6	16.9	12.9	13.5	12.4

Reconciliation of GAAP to Non-GAAP Financial Measures – Diluted EPS

(in millions except for share information)	Q2 2022	Q2 2021
Net income/(Loss)	2.5	5.1
Operating income (loss) adjustments	1.9	0.3
Hryvnia fair value adjustments on forward exchange contracts	(0.4)	-
Loss on extinguishment of debt	0.9	7.2
Adjusted (benefit) provision for income taxes[1]	(0.6)	1.9
Adjusted net income (loss)	4.3	10.7
Diluted EPS	0.08	0.16
Adjustments to diluted EPS	0.05	0.17
Adjusted diluted EPS	0.13	0.33

1: Reported Tax (Benefit) Provision adjusted for tax effect of special charges at 25%

Segment GAAP to Non GAAP QTD

For the Three Months Ended June 30, 2022						
(in millions)	Vehicle Solutions	Warehouse Automation	Electrical Systems	Aftermarket & Accessories	Corporate	Total
Operating Income/(Loss)	1.5	1.3	5.9	1.1	(3.6)	6.2
Deferred consideration purchase accounting	-	0.1	-	-	-	0.1
Restructuring	-	0.3	0.6	0.6	0.3	1.8
Adjusted Operating Income/(Loss)	1.5	1.7	6.5	1.7	(3.3)	8.1
Adjusted Operating Income/(Loss)	1.1%	6.1%	13.8%	5.3%		3.2%

For the Three Months Ended June 30, 2021						
(in millions)	Vehicle Solutions	Warehouse Automation	Electrical Systems	Aftermarket & Accessories	Corporate	Total
Operating Income/(Loss)	8.2	8.5	3.1	3.7	(7.2)	16.3
Deferred consideration purchase accounting	-	0.1	-	-	-	0.1
Investigation	-	-	-	-	0.2	0.2
Adjusted Operating Income/(Loss)	8.2	8.6	3.1	3.7	(7.0)	16.6
Adjusted Operating Income/(Loss)	6.3%	15.8%	7.1%	12.6%		6.5%

Reconciliation of GAAP to Non-GAAP Cash Flow Information

(in millions)	Q3 2020	Q4 2020	Q1 2021	Q2 2021	Q3 2021	Q4 2021	Q1 2022	Q2 2022
Cash Flow from Operations	$ 10.4	$ 3.6	$ (15.4)	$ (9.4)	$ 3.9	$ (8.9)	$ (21.4)	$ 16.9
Capital Expenditures[1]	(1.0)	(1.0)	(1.7)	(5.2)	(4.5)	(6.2)	(3.6)	(5.0)
Free Cash Flow	9.4	2.6	(17.1)	(14.6)	(0.6)	(15.1)	(25.0)	11.9

[1]: Net of proceeds from disposal/sale of property, plant, and equipment